TGU GmbH & Co. KG
Joseph-Monier-Str. 2
48268 Greven
Deutschland

Kontakt:
Telefon: +49 2575/95587-15
Fax: +49 2575/95587-87
E-Mail: info@tgu-shop.com

Rechtliches:
Amtsgericht Ibbenbüren
USt-ID-Nr.:
DE 125543036

Overview

Roll support for push-pull tubes 80 x 40 mm / 27 + 32

Product number: 03208040-1

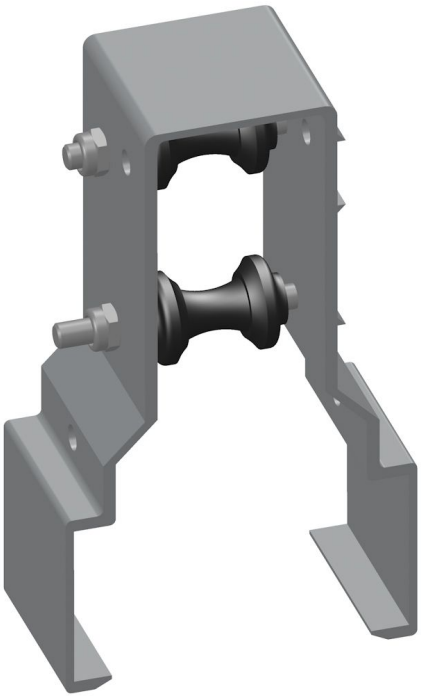

Options

PU (Pcs)

1 | 32

Image

TGU GmbH & Co. KG
Joseph-Monier-Str. 2
48268 Greven
Deutschland

Kontakt:
Telefon: +49 2575/95587-15
Fax: +49 2575/95587-87
E-Mail: info@tgu-shop.com

Rechtliches:
Amtsgericht Ibbenbüren
USt-ID-Nr.:
DE 125543036

Description

- **Application area:** Push rod support for truss ventilation in greenhouses with trusses
- **Material:** Aluminum housing with plastic diabolo rollers
- **Compatibility:** Suitable for trusses with a strap dimension of 80 × 40 mm
- **Special feature:** Flexible mounting of diabolo rollers for 27 mm and 32 mm pipes

The **Roller housing 80×40** serves as a push rod support for truss ventilation in greenhouses with trusses. It is simply pushed onto the truss and enables secure guidance of the push rods.

Thanks to the flexible mounting of the diabolo rollers, the housing is suitable for pipes with diameters of 27 mm and 32 mm.