TGU GmbH & Co. KG
Joseph-Monier-Str. 2
48268 Greven
Deutschland

Kontakt:
Telefon: +49 2575/95587-15
Fax: +49 2575/95587-87
E-Mail: info@tgu-shop.com

Rechtliches:
Amtsgericht Ibbenbüren
USt-ID-Nr.:
DE 125543036

Overview

Diabolo roll 27.32 Set 3 with variable mounting plate

Product number: 04200500-1

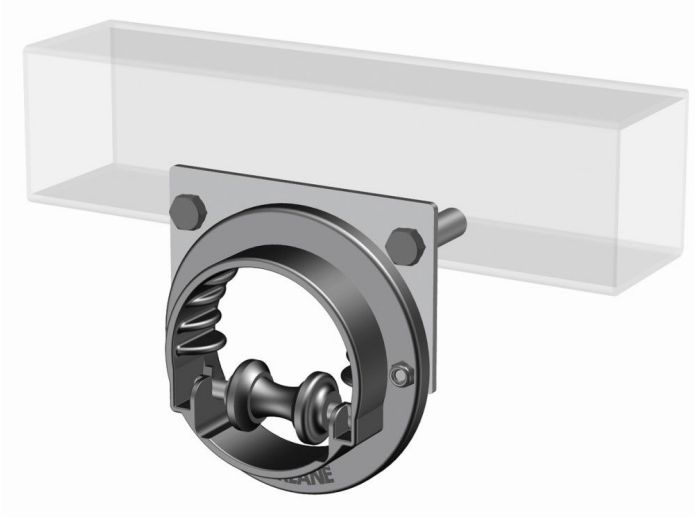

Options

PU (Pcs)

1 | 50

Image

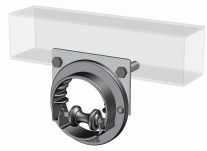

Image

TGU GmbH & Co. KG
Joseph-Monier-Str. 2
48268 Greven
Deutschland

Kontakt:
Telefon: +49 2575/95587-15
Fax: +49 2575/95587-87
E-Mail: info@tgu-shop.com

Rechtliches:
Amtsgericht Ibbenbüren
USt-ID-Nr.:
DE 125543036

Description

- **Application area:** Guidance of push rods in shading systems with push rod drive
- **Material:** Diabolo roller made of plastic, housing made of stamped sheet metal
- **Installation:** Rotatable plastic insert for flexible positioning
- **Special features:** Plastic fins for precise push rod alignment

The **Diabolo roll 27.32 Set 3 with variable mounting plate** is designed for precise guidance of push rods in shading systems with push rod drive. Thanks to its rotatable plastic insert, it can be used in various mounting positions.

The integrated plastic fins support accurate alignment of the push rod, ensuring stable and reliable operation.