TGU GmbH & Co. KG
Joseph-Monier-Str. 2
48268 Greven
Deutschland

Kontakt:
Telefon: +49 2575/95587-15
Fax: +49 2575/95587-87
E-Mail: info@tgu-shop.com

Rechtliches:
Amtsgericht Ibbenbüren
USt-ID-Nr.:
DE 125543036

Overview

Endguide with bearing for tube motor 63 mm

Product number: 25250016

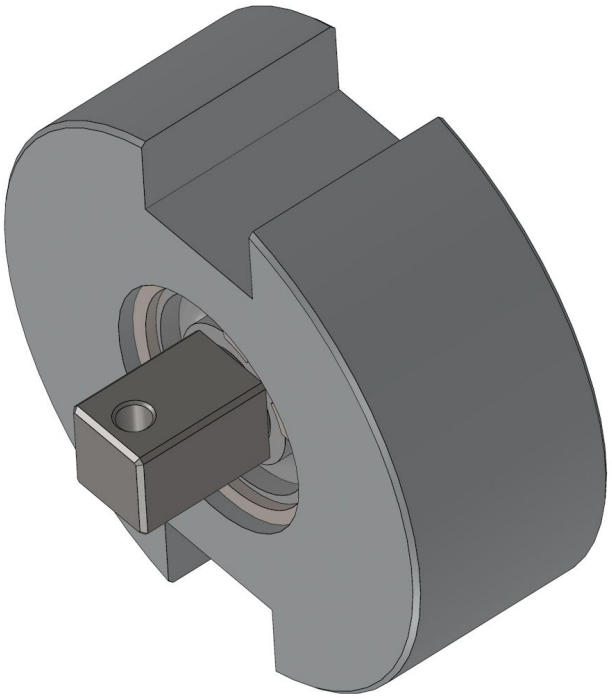

Image Image

Options

Version

50 mm | 63 mm

TGU GmbH & Co. KG
Joseph-Monier-Str. 2
48268 Greven
Deutschland

Kontakt:
Telefon: +49 2575/95587-15
Fax: +49 2575/95587-87
E-Mail: info@tgu-shop.com

Rechtliches:
Amtsgericht Ibbenbüren
USt-ID-Nr.:
DE 125543036

Description

- **Application:** Guides roll-up tubes on the side opposite the tube motor
- **Material:** Aluminum
- **Installation:** Inserted into the roll-up tube

The **Endguide with Bearing for Tube Motor 63 mm** performs the same guiding function as its 50 mm counterpart, but is designed for larger roll-up tubes. Its ball-bearing design ensures smooth operation and long-term durability in greenhouse shading systems.