TGU GmbH & Co. KG
Joseph-Monier-Str. 2
48268 Greven
Deutschland

Kontakt:
Telefon: +49 2575/95587-15
Fax: +49 2575/95587-87
E-Mail: info@tgu-shop.com

Rechtliches:
Amtsgericht Ibbenbüren
USt-ID-Nr.:
DE 125543036

Overview

Diabolo roll 27.32 Set 3 with variable mounting plate - 50 pcs

Product number: 04200500

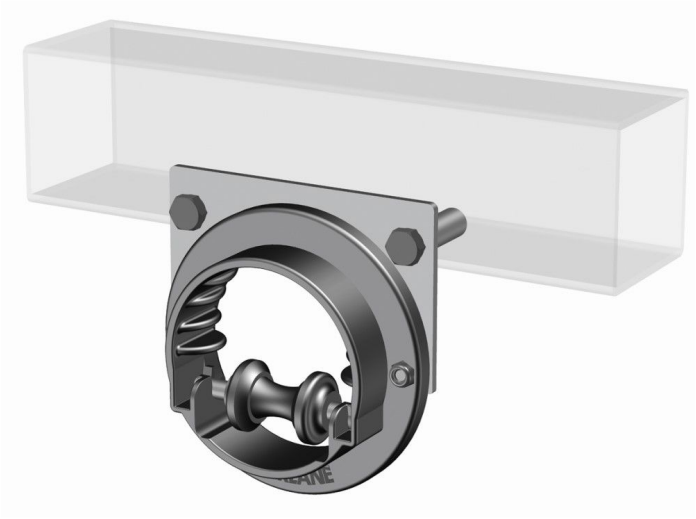

Options

PU (Pcs)

1 | 50

Image

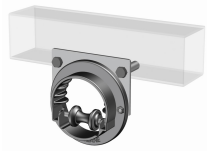

Image

TGU GmbH & Co. KG
Joseph-Monier-Str. 2
48268 Greven
Deutschland

Kontakt:
Telefon: +49 2575/95587-15
Fax: +49 2575/95587-87
E-Mail: info@tgu-shop.com

Rechtliches:
Amtsgericht Ibbenbüren
USt-ID-Nr.:
DE 125543036

Description

- **Application:** Push rod guidance in shading systems with push-drive setups
- **Material:** Plastic diabolo roller with stamped sheet metal housing
- **Installation:** Rotating plastic insert allows flexible positioning
- **Features:** Integrated plastic lamellae assist with push rod alignment
- **Packaging Unit:** 50 pcs

Diabolo Roller 27.32 Set 3 with Adjustable Mounting Plate offers precision guidance of push rods in greenhouse shading systems. The rotating plastic insert enables variable installation angles for optimal flexibility.

Plastic lamellae help fine-tune push rod position, ensuring stable and consistent motion. A rugged choice for accurate and professional shading automation.