TGU GmbH & Co. KG
Joseph-Monier-Str. 2
48268 Greven
Deutschland

Kontakt:
Telefon: +49 2575/95587-15
Fax: +49 2575/95587-87
E-Mail: info@tgu-shop.com

Rechtliches:
Amtsgericht Ibbenbüren
USt-ID-Nr.:
DE 125543036

## Overview

# 4 bearing shaft support 1" short - PU = 36 pcs

**Product number:** 25100101

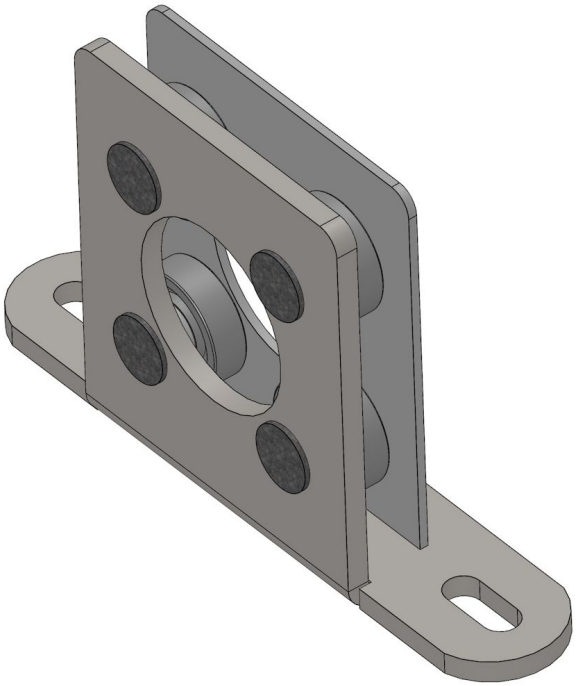

### Options

**PU (Pcs)**

1 | 20 | 36

**Version**

long | short

Image



TGU GmbH & Co. KG
Joseph-Monier-Str. 2
48268 Greven
Deutschland

Kontakt:
Telefon: +49 2575/95587-15
Fax: +49 2575/95587-87
E-Mail: info@tgu-shop.com

Rechtliches:
Amtsgericht Ibbenbüren
USt-ID-Nr.:
DE 125543036

# Description

- **Application:** Suitable for central drives in suspended and laid-out shading systems
- **Material:** Galvanized steel for high stability and corrosion resistance
- **Function:** Serves as the bearing point for the drive shaft and ensures precise positioning
- **Feature:** Short version for 34 mm pipes
- **Packing unit:** 36 pieces

The **4 Bearing 1″ Short** is designed for central drives in suspended and laid-out shading systems. It acts as the bearing point for the drive shaft and ensures accurate alignment within the system.

Its compact design makes it ideal for 34 mm pipes, providing stable and reliable performance. The galvanized steel construction offers excellent durability and long-term resistance to environmental stress.